**LRC Coil**
**Steam Coils with Opposite End Connections Worksheet**
Phone 562-944-1969 Fax: 562-944-4979 www.lrccoil.com

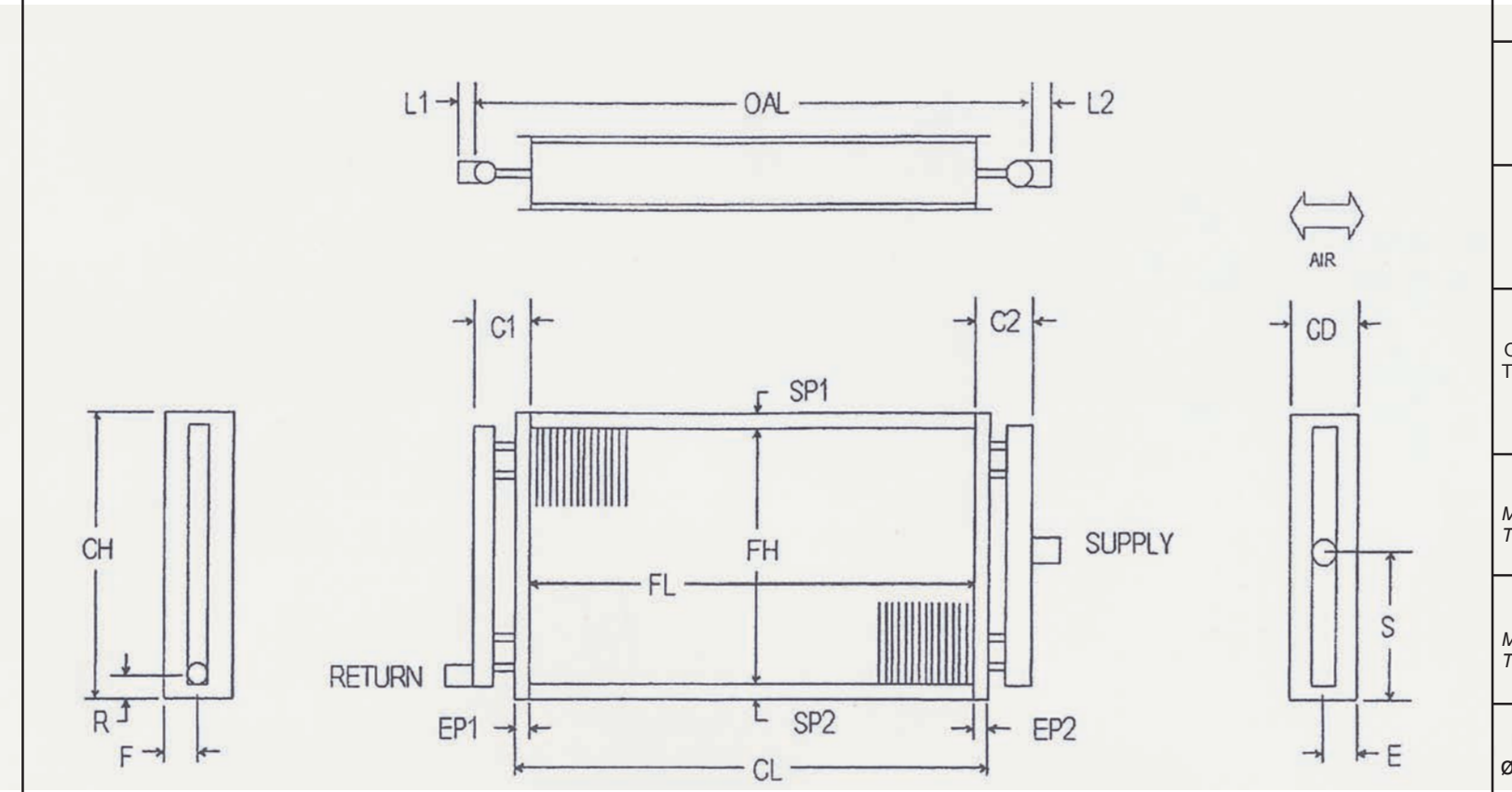


| Steam Coils Opposite End | |
|---|---|
| **Rows** | |
| **FPI** | |
| **Tubes** OD & Wall Thickness *Copper Only* | |
| **Fins** *Material & Thickness* | |
| **Casing** *Material & Thickness* | |
| **Headers** Ø Diameter *Copper Only* | |

| Dimensional Data (In Inches) | | | | | | | | | | | | | | | | | | | Supply | | Return | | Connection Sizes ☐ MPT / Sweat / FPT | | |
|---|---|---|---|---|---|---|---|---|---|---|---|---|---|---|---|---|---|---|---|---|---|---|---|---|---|
| Item | Qty | Rows | FPI | SP1 | FH | SP2 | CH | EP1 | FL | EP2 | CL | C1 | C2 | OAL | L1 | L2 | CD | S | E | R | F | Supply | Return | CU |
| | | | | | | | | | | | | | | | | | | | | | | | | STL |

| | | | |
|---|---|---|---|
| **P.O. #** | | **Customer** | |
| **W.O. #** | | **Model No.** | |
| **Approved By** | | **Tag:** | |
| **Date** | | **Notes** | |

**Notes**

| | | | | | | | | | | | | | |
|---|---|---|---|---|---|---|---|---|---|---|---|---|---|
| **Performance Data** | **CFM** | | **EAT** | | **LAT** | | **Capacity** | | **Steam Press. (psig)** | |